EN **User Manual**
Hob

HK654200FB

AEG
perfekt in form und funktion

CONTENTS

1. SAFETY INFORMATION....3
2. SAFETY INSTRUCTIONS....4
3. PRODUCT DESCRIPTION....6
4. DAILY USE....8
5. HINTS AND TIPS....11
6. CARE AND CLEANING....12
7. TROUBLESHOOTING....13
8. INSTALLATION....15
9. TECHNICAL INFORMATION....17
10. ENERGY EFFICIENCY....18

FOR PERFECT RESULTS

Thank you for choosing this AEG product. We have created it to give you impeccable performance for many years, with innovative technologies that help make life simpler features you might not find on ordinary appliances. Please spend a few minutes reading to get the very best from it.
Visit our website for:

Get usage advice, brochures, trouble shooter, service information:
www.aeg.com

Register your product for better service:
www.registeraeg.com

Buy Accessories, Consumables and Original spare parts for your appliance:
www.aeg.com/shop

CUSTOMER CARE AND SERVICE

Always use original spare parts.
When contacting our Authorised Service Centre, ensure that you have the following data available: Model, PNC, Serial Number.
The information can be found on the rating plate.

Warning / Caution-Safety information

General information and tips

Environmental information

Subject to change without notice.

1. ⚠ SAFETY INFORMATION

Before the installation and use of the appliance, carefully read the supplied instructions. The manufacturer is not responsible if an incorrect installation and use causes injuries and damages. Always keep the instructions with the appliance for future reference.

1.1 Children and vulnerable people safety

- This appliance can be used by children aged from 8 years and above and persons with reduced physical, sensory or mental capabilities or lack of experience and knowledge if they have been given supervision or instruction concerning use of the appliance in a safe way and understand the hazards involved.
- Do not let children play with the appliance.
- Keep all packaging away from children.
- Keep children and pets away from the appliance when it operates or when it cools down. Accessible parts are hot.
- If the appliance has a child safety device, we recommend you activate it.
- Cleaning and user maintenance shall not be made by children without supervision.
- Children of less than 3 years should be kept away unless continuously supervised.

1.2 General Safety

- The appliance and its accessible parts become hot during use. Do not touch the heating elements.
- Do not operate the appliance by means of an external timer or separate remote-control system.
- Unattended cooking on a hob with fat or oil can be dangerous and may result in fire.
- Never try to extinguish a fire with water, but switch off the appliance and then cover flame e.g. with a lid or a fire blanket.

- Do not store items on the cooking surfaces.
- Metallic objects such as knives, forks, spoons and lids should not be placed on the hob surface since they can get hot.
- Do not use a steam cleaner to clean the appliance.
- After use, switch off the hob element by its control and do not rely on the pan detector.
- If the glass ceramic surface / glass surface is cracked, switch off the appliance to avoid the possibility of electric shock.
- If the supply cord is damaged, it must be replaced by the manufacturer, an authorized Service or similarly qualified persons in order to avoid a hazard.

2. SAFETY INSTRUCTIONS

2.1 Installation

WARNING!
Only a qualified person must install this appliance.

- Remove all the packaging.
- Do not install or use a damaged appliance.
- Obey the installation instruction supplied with the appliance.
- Keep the minimum distance from the other appliances and units.
- Always be careful when you move the appliance because it is heavy. Always wear safety gloves.
- Seal the cut surfaces with a sealant to prevent moisture to cause swelling.
- Protect the bottom of the appliance from steam and moisture.
- Do not install the appliance adjacent to a door or under a window. This prevents hot cookware to fall from the appliance when the door or the window is opened.
- If the appliance is installed above drawers make sure that the space, between the bottom of the appliance and the upper drawer, is sufficient for air circulation.
- The bottom of the appliance can get hot. Make sure to install a non-combustile separation panel under the appliance to prevent access to the bottom.
- Make sure that the ventilation space of 2 mm, between the worktop and the front of the below unit, is free. The warranty does not cover damages caused by the lack of an adequate ventilation space.

2.2 Electrical Connection

WARNING!
Risk of fire and electrical shock.

- All electrical connections should be made by a qualified electrician.
- The appliance must be earthed.
- Before carrying out any operation make sure that the appliance is disconnected from the power supply.
- Make sure that the electrical information on the rating plate agrees with the power supply. If not, contact an electrician.
- Make sure the appliance is installed correctly. Loose and incorrect electricity mains cable or plug (if applicable) can make the terminal become too hot.
- Use the correct electricity mains cable.
- Do not let the electricity mains cable tangle.

- Make sure that a shock protection is installed.
- Use the strain relief clamp on the cable.
- Make sure the mains cable or plug (if applicable) does not touch the hot appliance or hot cookware, when you connect the appliance to the near sockets
- Do not use multi-plug adapters and extension cables.
- Make sure not to cause damage to the mains plug (if applicable) or to the mains cable. Contact an Authorised Service Centre or an electrician to change a damaged mains cable.
- The shock protection of live and insulated parts must be fastened in such a way that it cannot be removed without tools.
- Connect the mains plug to the mains socket only at the end of the installation. Make sure that there is access to the mains plug after the installation.
- If the mains socket is loose, do not connect the mains plug.
- Do not pull the mains cable to disconnect the appliance. Always pull the mains plug.
- Use only correct isolation devices: line protecting cut-outs, fuses (screw type fuses removed from the holder), earth leakage trips and contactors.
- The electrical installation must have an isolation device which lets you disconnect the appliance from the mains at all poles. The isolation device must have a contact opening width of minimum 3 mm.

2.3 Use

WARNING!
Risk of injury, burns and electrical shock.

- Remove all the packaging, labelling and protective film (if applicable) before first use.
- Use this appliance in a household environment.
- Do not change the specification of this appliance.
- Make sure that the ventilation openings are not blocked.
- Do not let the appliance stay unattended during operation.
- Set the cooking zone to “off” after each use.
- Do not rely on the pan detector.
- Do not put cutlery or saucepan lids on the cooking zones. They can become hot.
- Do not operate the appliance with wet hands or when it has contact with water.
- Do not use the appliance as a work surface or as a storage surface.
- If the surface of the appliance is cracked, disconnect immediately the appliance from the power supply. This to prevent an electrical shock.
- Users with a pacemaker must keep a distance of minimum 30 cm from the induction cooking zones when the appliance is in operation.
- When you place food into hot oil, it may splash.

WARNING!
Risk of fire and explosion

- Fats and oil when heated can release flammable vapours. Keep flames or heated objects away from fats and oils when you cook with them.
- The vapours that very hot oil releases can cause spontaneous combustion.
- Used oil, that can contain food remnants, can cause fire at a lower temperature than oil used for the first time.
- Do not put flammable products or items that are wet with flammable products in, near or on the appliance.

WARNING!
Risk of damage to the appliance.

- Do not keep hot cookware on the control panel.
- Do not let cookware to boil dry.
- Be careful not to let objects or cookware fall on the appliance. The surface can be damaged.
- Do not activate the cooking zones with empty cookware or without cookware.
- Do not put aluminium foil on the appliance.

- Cookware made of cast iron, aluminium or with a damaged bottom can cause scratches on the glass / glass ceramic. Always lift these objects up when you have to move them on the cooking surface.
- This appliance is for cooking purposes only. It must not be used for other purposes, for example room heating.

2.4 Care and cleaning

- Clean regularly the appliance to prevent the deterioration of the surface material.
- Deactivate the appliance and let it cool down before you clean it.
- Disconnect the appliance from the electrical supply before maintenance.
- Do not use water spray and steam to clean the appliance.
- Clean the appliance with a moist soft cloth. Only use neutral detergents. Do not use abrasive products, abrasive cleaning pads, solvents or metal objects.

2.5 Disposal

WARNING!
Risk of injury or suffocation.

- Contact your municipal authority for information on how to discard the appliance correctly.
- Disconnect the appliance from the mains supply.
- Cut off the mains cable and discard it.

3. PRODUCT DESCRIPTION

3.1 Cooking surface layout

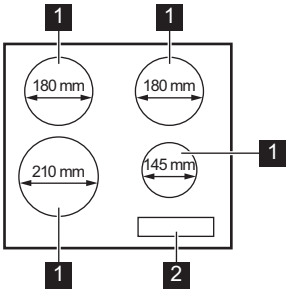

1 Induction cooking zone
2 Control panel

3.2 Control panel layout

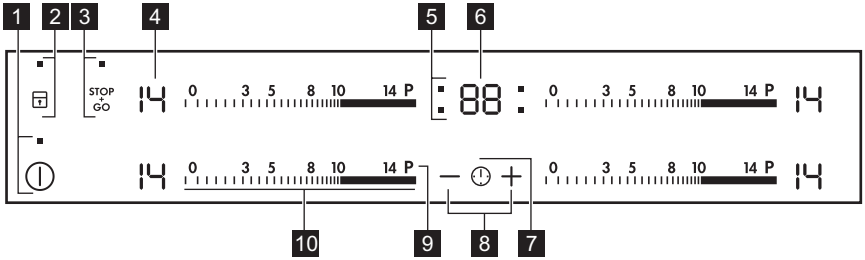

Use the sensor fields to operate the appliance. The displays, indicators and sounds tell which functions operate.

	Sensor field	Function	Comment
1	⏻	ON / OFF	To activate and deactivate the hob.
2	🔒	Lock / The Child Safety Device	To lock / unlock the control panel.
3	STOP + GO	STOP+GO	To activate and deactivate the function.
4	-	Heat setting display	To show the heat setting.
5	-	Timer indicators of cooking zones	To show for which zone you set the time.
6	-	Timer display	To show the time in minutes.
7	⏲	-	To select the cooking zone.
8	+ / −	-	To increase or decrease the time.
9	P	Power function	To activate and deactivate the function.
10	-	Control bar	To set a heat setting.

3.3 Heat setting displays

Display	Description
0	The cooking zone is deactivated.
1 - 14	The cooking zone operates.
u	STOP+GO function operates.
A	Automatic Heat Up function operates.
P	Power function operates.
E + digit	There is a malfunction.
≡ / = / _	OptiHeat Control (3 step Residual heat indicator): continue cooking / keep warm / residual heat.
L	Lock / The Child Safety Device function operates.
F	Incorrect or too small cookware or no cookware on the cooking zone.
-	Automatic Switch Off function operates.

3.4 OptiHeat Control (3 step Residual heat indicator)

WARNING!
/ / There is a risk of burns from residual heat.
The indicator shows the level of the residual heat.

The induction cooking zones make the heat necessary for cooking process directly in the bottom of the cookware. The glass ceramic is heated by the heat of the cookware.

4. DAILY USE

WARNING!
Refer to Safety chapters.

4.1 Activating and deactivating

Touch for 1 second to activate or deactivate the hob.

4.2 Automatic Switch Off

The function deactivates the hob automatically if:

- all cooking zones are deactivated,
- you do not set the heat setting after you activate the hob,
- you spill something or put something on the control panel for more than 10 seconds (a pan, a cloth, etc.). An acoustic signal sounds and the hob deactivates. Remove the object or clean the control panel.
- the hob gets too hot (e.g. when a saucepan boils dry). Let the cooking zone cool down before you use the hob again.
- you use incorrect cookware. The symbol comes on and the cooking zone deactivates automatically after 2 minutes.
- you do not deactivate a cooking zone or change the heat setting. After some time comes on and the hob deactivates.

The relation between the heat setting and the time after which the hob deactivates:

Heat setting	The hob deactivates after
, 1 - 3	6 hours
4 - 7	5 hours
8 - 9	4 hours
10 - 14	1.5 hour

4.3 The heat setting

To set or change the heat setting:

Touch the control bar at the correct heat setting or move your finger along the control bar until you reach the correct heat setting.

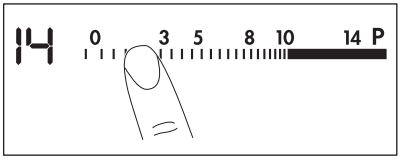

4.4 Automatic Heat Up

If you activate this function you can get a necessary heat setting in a shorter time. The function sets the highest heat setting for some time and then decreases to the correct heat setting.

To activate the function the cooking zone must be cold.

To activate the function for a cooking zone: touch P (comes on). Immediately touch the correct heat setting. After 3 seconds comes on.

To deactivate the function: change the heat setting.

4.5 Power function

This function makes more power available to the induction cooking zones. The function can be activated for the induction cooking zone only for a limited period of time. After this time the induction cooking zone automatically sets back to the highest heat setting.

Refer to "Technical information" chapter.

To activate the function for a cooking zone: touch P. P comes on.

To deactivate the function: change the heat setting.

4.6 Timer

Count Down Timer
You can use this function to set how long the cooking zone should operate for a single cooking session.

First set the cooking zone then set the function. You can set the heat setting before or after you set the function.

To set the cooking zone: touch ⏲ again and again until the indicator of a necessary cooking zone comes on.

To activate the function: touch + of the timer to set the time (**00 - 99** minutes). When the indicator of the cooking zone starts to flash slowly the time counts down.

To see the remaining time: set the cooking zone with ⏲. The indicator of the cooking zone starts to flash quickly. The display shows the remaining time.

To change the time: set the cooking zone with ⏲. Touch + or —.

To deactivate the function: set the cooking zone with ⏲ and touch —. The remaining time counts back to **00**. The indicator of the cooking zone goes out. To deactivate the function you can also touch + and — at the same time.

When the time comes to an end, the sound operates and **00** flashes. The cooking zone deactivates.

To stop the sound: touch ⏲.

CountUp Timer (The count up timer)
You can use this function to monitor how long the cooking zone operates.

To set the cooking zone: touch ⏲ again and again until the indicator of a necessary cooking zone comes on.

To activate the function: touch — of the timer. UP comes on. When the indicator of the cooking zone starts to flash slowly the time counts up. The display switches between UP and counted time (minutes).

To see how long the cooking zone operates: set the cooking zone with ⏲. The indicator of the cooking zone starts to flash quickly. The display shows how long the zone operates.

To deactivate the function: set the cooking zone with ⏲ and touch + or —. The indicator of the cooking zone goes out.

Minute Minder
You can use this function as a **Minute Minder** when the hob is activated and the cooking zones do not operate (the heat setting display shows 0).

To activate the function: touch ⏲. Touch + or — of the timer to set the time. When the time comes to an end, the sound operates and **00** flashes.

To stop the sound: touch ⏲.

The function has no effect on the operation of the cooking zones.

4.7 STOP+GO

This function sets all cooking zones that operate to the lowest heat setting.

When the function operates, you cannot change the heat setting.

The function does not stop the timer functions.

To activate the function: touch STOP + GO. u comes on.

To deactivate the function: touch STOP + GO. The previous heat setting comes on.

4.8 Lock

You can lock the control panel while cooking zones operate. It prevents an accidental change of the heat setting.

Set the heat setting first.

To activate the function: touch ⊟. L comes on for 4 seconds. The Timer stays on.

To deactivate the function: touch ⊟. The previous heat setting comes on.

When you deactivate the hob, you also deactivate this function.

4.9 The Child Safety Device

This function prevents an accidental operation of the hob.

To activate the function: activate the hob with ⏻. Do not set the heat setting. Touch ⊟ for 4 seconds. L comes on. Deactivate the hob with ⏻.

To deactivate the function: activate the hob with ⏻. Do not set the heat setting. Touch ⊟ for 4 seconds. 0 comes on. Deactivate the hob with ⏻.

To override the function for only one cooking time: activate the hob with ⏻. L comes on. Touch ⊟ for 4 seconds. **Set the heat setting in 10 seconds.** You can operate the hob. When you deactivate the hob with ⏻ the function operates again.

4.10 OffSound Control (Deactivation and activation of the sounds)

Deactivate the hob. Touch ⏻ for 3 seconds. The display comes on and goes out. Touch ⊟ for 3 seconds. bo or bi comes on. Touch + of the timer to choose one of the following:

- bi - the sounds are off
- bo - the sounds are on

To confirm your selection wait until the hob deactivates automatically.

When the function is set to bi you can hear the sounds only when:

- you touch ⏻
- Minute Minder comes down
- Count Down Timer comes down
- you put something on the control panel.

4.11 Power management function

- Cooking zones are grouped according to the location and number of the phases in the hob. See the illustration.
- Each phase has a maximum electricity loading of 3700 W.
- The function divides the power between cooking zones connected to the same phase.
- The function activates when the total electricity loading of the cooking zones connected to a single phase exceeds 3700 W.
- The function decreases the power to the other cooking zones connected to the same phase.
- The heat setting display of the reduced zones changes between two levels.

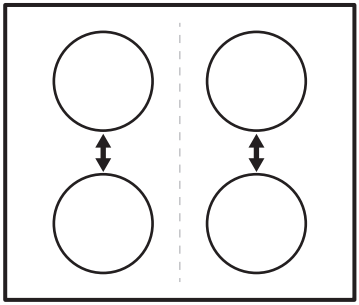

5. HINTS AND TIPS

WARNING!
Refer to Safety chapters.

5.1 Cookware

For induction cooking zones a strong electro-magnetic field creates the heat in the cookware very quickly.

Use the induction cooking zones with correct cookware.

Cookware material

- **correct:** cast iron, steel, enamelled steel, stainless steel, the bottom made of multi-layer (with correct mark from a manufacturer).
- **not correct:** aluminium, copper, brass, glass, ceramic, porcelain.

Cookware is correct for an induction hob if:

- some water boils very quickly on a zone set to the highest heat setting.
- a magnet pulls on to the bottom of the cookware.

The bottom of the cookware must be as thick and flat as possible.

Cookware dimensions

Induction cooking zones adapt to the dimension of the bottom of the cookware automatically to some limit.

The cooking zone efficiency is related to the diameter of the cookware. The cookware with a smaller diameter than the minimum receives only a part of the power generated by the cooking zone.

Refer to “Technical information” chapter.

5.2 The noises during operation

If you can hear:

- crack noise: cookware is made of different materials (sandwich construction).
- whistle sound: you the cooking zone with high power level and the cookware is made of different materials (sandwich construction).
- humming: you use high power level.
- clicking: electric switching occurs.
- hissing, buzzing: the fan operates.

The noises are normal and do not refer to hob malfunction.

5.3 Öko Timer (Eco Timer)

To save energy, the heater of the cooking zone deactivates before the count down timer sounds. The difference in the operation time depends on the heat setting level and the length of the cooking operation.

5.4 Examples of cooking applications

The relation between the heat setting and the cooking zone consumption of power is not linear. When you increase the heat setting, it is not proportional to

the increase of the cooking zone consumption of power. It means that the cooking zone with the medium heat setting uses less than a half of its power.

The data in the table is for guidance only.

Heat setting	Use to:	Time (min)	Hints
⊔ - 1	Keep cooked food warm.	as necessary	Put a lid on the cookware.
1 - 3	Hollandaise sauce, melt: butter, chocolate, gelatine.	5 - 25	Mix from time to time.
1 - 3	Solidify: fluffy omelettes, baked eggs.	10 - 40	Cook with a lid on.
3 - 5	Simmer rice and milkbased dishes, heating up ready-cooked meals.	25 - 50	Add the minimum twice as much liquid as rice, mix milk dishes part procedure through.
5 - 7	Steam vegetables, fish, meat.	20 - 45	Add some tablespoons of liquid.
7 - 9	Steam potatoes.	20 - 60	Use max. ¼ l water for 750 g of potatoes.
7 - 9	Cook larger quantities of food, stews and soups.	60 - 150	Up to 3 l liquid plus ingredients.
9 - 12	Gentle fry: escalope, veal cordon bleu, cutlets, rissoles, sausages, liver, roux, eggs, pancakes, doughnuts.	as necessary	Turn halfway through.
12 - 13	Heavy fry, hash browns, loin steaks, steaks.	5 - 15	Turn halfway through.
14	Boil water, cook pasta, sear meat (goulash, pot roast), deep-fry chips.		
P	Boil large quantities of water. Power function is activated.		

6. CARE AND CLEANING

WARNING!
Refer to Safety chapters.

6.1 General information

- Clean the hob after each use.
- Always use cookware with clean bottom.
- Scratches or dark stains on the surface have no effect on how the hob operates.
- Use a special cleaner applicable for the surface of the hob.
- Use a special scraper for the glass.

6.2 Cleaning the hob

- **Remove immediately:** melted plastic, plastic foil, and food with sugar. If not, the dirt can cause damage to the hob. Put the special scraper on the glass

surface at an acute angle and move the blade on the surface.

- **Remove when the hob is sufficiently cool:** limescale rings, water rings, fat stains, shiny metallic discoloration.

Clean the hob with a moist cloth and some detergent. After cleaning, rub the hob dry with a soft cloth.

7. TROUBLESHOOTING

WARNING!
Refer to Safety chapters.

7.1 What to do if...

Problem	Possible cause	Remedy
You cannot activate or operate the hob.	The hob is not connected to an electrical supply or it is connected incorrectly.	Check if the hob is correctly connected to the electrical supply. Refer to the connection diagram.
	The fuse is released.	Make sure that the fuse is the cause of the malfunction. If the fuse releases again and again, contact a qualified electrician.
		Activate the hob again and set the heat setting in less than 10 seconds.
	You touched 2 or more sensor fields at the same time.	Touch only one sensor field.
	STOP+GO function operates.	Refer to "Daily use" chapter.
	There is water or fat stains on the control panel.	Clean the control panel.
An acoustic signal sounds and the hob deactivates. An acoustic signal sounds when the hob is deactivated.	You put something on one or more sensor fields.	Remove the object from the sensor fields.
The hob deactivates.	You put something on the sensor field ⏻.	Remove the object from the sensor field.
Residual heat indicator does not come on.	The zone is not hot because it operated only for a short time.	If the zone operated sufficiently long to be hot, speak to an Authorised Service Centre.
Automatic Heat Up function does not operate.	The zone is hot.	Let the zone become sufficiently cool.

Problem	Possible cause	Remedy
	The highest heat setting is set.	The highest heat setting has the same power as the function.
The heat setting changes between two levels.	Power management function operates.	Refer to "Daily use" chapter.
The sensor fields become hot.	The cookware is too large or you put it too near to the controls.	Put large cookware on the rear zones if possible.
There is no signal when you touch the panel sensor fields.	The signals are deactivated.	Activate the signals. Refer to "Daily use" chapter.
[-] comes on.	Automatic Switch Off operates.	Deactivate the hob and activate it again.
[L] comes on.	The Child Safety Device or the Lock function operates.	Refer to "Daily use" chapter.
[F] comes on.	There is no cookware on the zone.	Put cookware on the zone.
	The cookware is incorrect.	Use the correct cookware. Refer to “Hints and tips” chapter.
	The diameter of the bottom of the cookware is too small for the zone.	Use cookware with correct dimensions. Refer to “Technical information” chapter.
[E] and a number come on.	There is an error in the hob.	Disconnect the hob from the electrical supply for some time. Disconnect the fuse from the electrical system of the house. Connect it again. If [E] comes on again, speak to an Authorised Service Centre.

Problem	Possible cause	Remedy
E4 comes on.	There is an error in the hob because a cookware boils dry. Automatic Switch Off and the overheating protection for the zones operate.	Deactivate the hob. Remove the hot cookware. After approximately 30 seconds, activate the zone again. If the cookware was the problem, the error message goes out. Residual heat indicator can stay on. Let the cookware become sufficiently cool. Check if your cookware is compatible with the hob. Refer to “Hints and tips” chapter.

7.2 If you cannot find a solution...

If you cannot find a solution to the problem yourself, contact your dealer or an Authorised Service Centre. Give the data from the rating plate. Give also three digit letter code for the glass ceramic (it is in the corner of the glass surface) and an error message that comes on. Make sure, you operated the hob correctly. If not the servicing by a service technician or dealer will not be free of charge, also during the warranty period. The instructions about the Service Centre and conditions of guarantee are in the guarantee booklet.

8. INSTALLATION

WARNING!
Refer to Safety chapters.

8.1 Before the installation

Before you install the hob, write down the information bellow from the rating plate. The rating plate is on the bottom of the hob.

Serial number .....

8.2 Built-in hobs

Only use the built-in hobs after you assemble the hob into correct built-in units and work surfaces that align to the standards.

8.3 Connection cable

- For a single phase or two phase connection use the following (or higher) mains cable type: H05BB-F Tmax 90°C.
- To replace the damaged mains cable use the following (or higher) mains cable type: H05BB-F Tmax 90°C. Speak to your local Service Centre.

8.4 Assembly

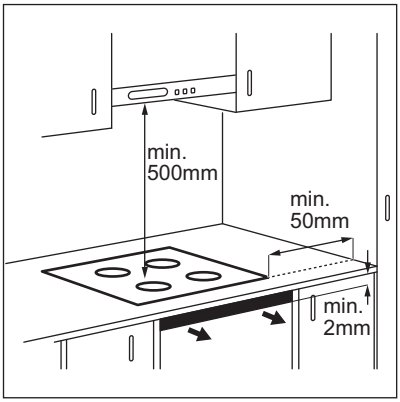
min.
500mm
min.
50mm
min.
2mm

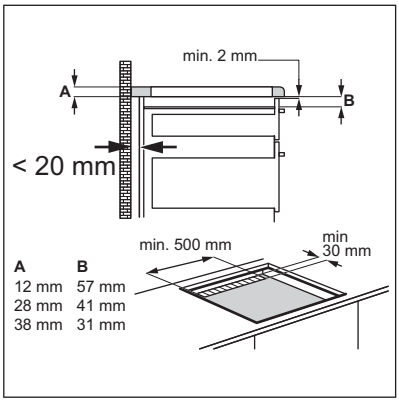
min. 2 mm
A
B
< 20 mm
min. 500 mm
min
30 mm
A B
12 mm 57 mm
28 mm 41 mm
38 mm 31 mm

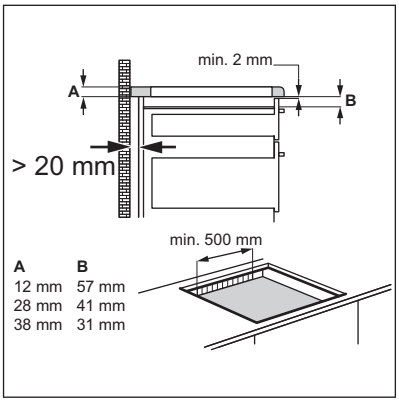
min. 2 mm
A
B
> 20 mm
min. 500 mm
A B
12 mm 57 mm
28 mm 41 mm
38 mm 31 mm

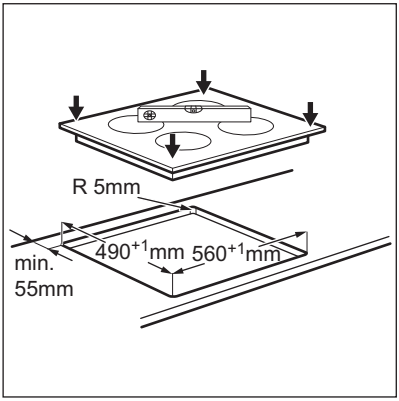
R 5mm
min.
55mm
490+1mm 560+1mm

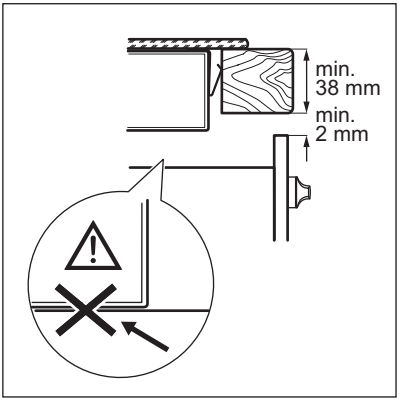
min.
38 mm
min.
2 mm

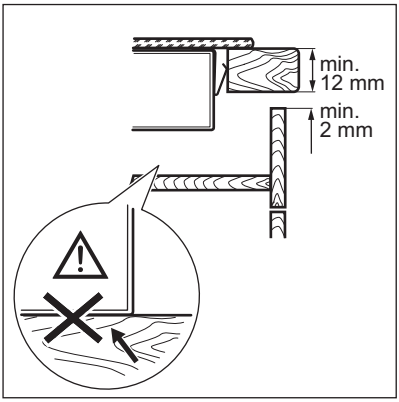

8.5 Protection box

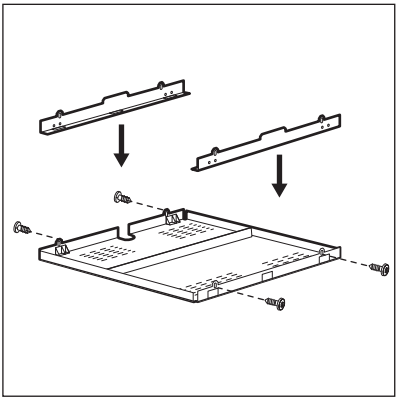

If you use a protection box (an additional accessory), the front airflow space of 2 mm and the protective floor directly below the hob are not necessary. The protection box accessory may not be available in some countries. Please contact your local supplier.

You can not use the protection box if you install the hob above an oven.

9. TECHNICAL INFORMATION

9.1 Rating plate

Modell HK654200FB
Typ 58 GAD D5 AU
Induction 7.4 kW
Ser.Nr. .....
AEG

PNC 949 595 108 01
220 - 240 V 50 - 60 Hz
Made in Germany
7.4 kW

9.2 Cooking zones specification

Cooking zone	Nominal power (maximum heat setting) [W]	Power function [W]	Power function maximum duration [min]	Cookware diameter [mm]
Left front	2300	3700	10	180 - 210
Left rear	1800	2800	10	145 - 180
Right front	1400	2500	4	125 - 145
Right rear	1800	2800	10	145 - 180

The power of the cooking zones can be different in some small range from the data in the table. It changes with the material and dimensions of the cookware.

For optimal cooking results use cookware not larger than the diameter in the table.

10. ENERGY EFFICIENCY

10.1 Product information according to EU 66/2014

Model identification		HK654200FB
Type of hob		Built-In Hob
Number of cooking zones		4
Heating technology		Induction
Diameter of circular cooking zones (Ø)	Left front Left rear Right front Right rear	21.0 cm 18.0 cm 14.5 cm 18.0 cm
Energy consumption per cooking zone (ECelectric cooking)	Left front Left rear Right front Right rear	167.2 Wh / kg 169.2 Wh / kg 178.1 Wh / kg 169.2 Wh / kg
Energy consumption of the hob (ECelectric hob)		170.9 Wh / kg

EN 60350-2 - Household electric cooking appliances - Part 2: Hobs - Methods for measuring performance

10.2 Energy saving

You can save energy during everyday cooking if you follow bellow hints.

- Put the cookware on the cooking zone before you activate it.
- Put smaller cookware on smaller cooking zones.
- Put the cookware directly in the centre of the cooking zone.
- When you heat up water use only the amount you need.
- If it is possible, put the lids on the cookware.
- Use the residual heat to keep the food warm or to melt it.

11. ENVIRONMENT CONCERNS

Recycle the materials with the symbol ♲. Put the packaging in applicable containers to recycle it. Help protect the environment and human health and to recycle waste of electrical and electronic appliances. Do not dispose appliances marked with the symbol with the household waste. Return the product to your local recycling facility or contact your municipal office.

www.aeg.com/shop

867311502-B-082015

CE

AEG

perfekt in form und funktion